# Big John® AIR CURTAINS

## (home appliance)

### Application：

*Prevents spillage of conditioned air, reduces infiltration of outside air and reduced operating costs of air-conditioning equipment.*

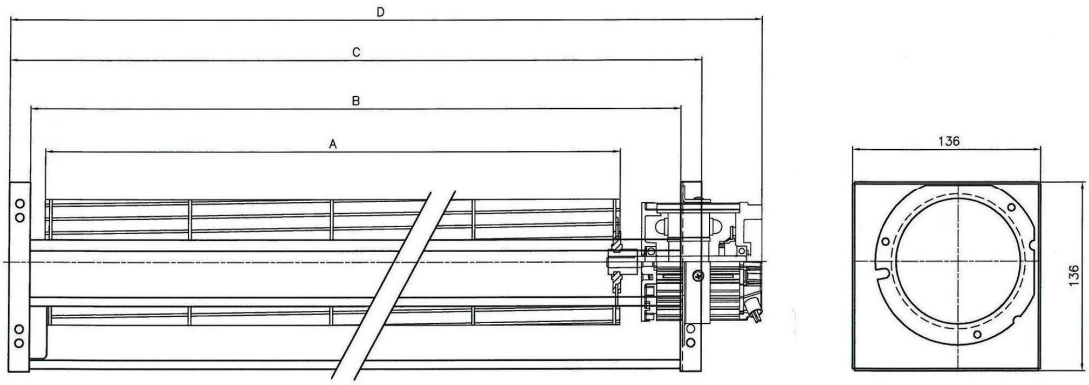


### Feature：

- Low temperature rise and durability.
- Tenfold life time to AC brush motors.
- Environmentally friendly and free maintenance.
- Variable speed available and low noise.
- High level of efficiency and energy-saving.
- Totally design and manufacture in Taiwan.

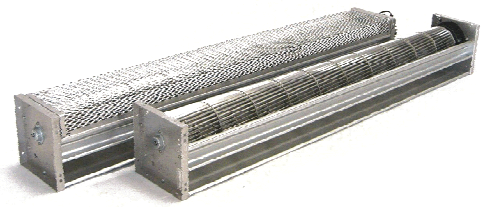

### Motor protection：

- Reverse polarity, Soft start protection, Over-load protection, Locked-rotor protection, Over temperature protection.
- Extra protection for customize：Dry running protection, Over voltage protection, Lower voltage protection.

| Model | Voltage | Air flow (CMH) | RPM | A (mm) | B (mm) | C (mm) | D (mm) |
|---|---|---|---|---|---|---|---|
| T090-2000A | 110V 50 / 60Hz | 2000 | 1900 | 880 | 930 | 960 | 1004 |
| T090-1400A | | 1400 | 1900 | 630 | 680 | 710 | 754 |
| T090-1200A | | 1200 | 1900 | 520 | 570 | 600 | 644 |
| T090-2000B | 220 ~ 240V 50 / 60Hz | 200 | 1900 | 880 | 930 | 960 | 1004 |
| T090-1400B | | 1400 | 1900 | 630 | 680 | 710 | 754 |
| T090-1200B | | 1200 | 1900 | 520 | 570 | 600 | 644 |


**POWER CIRCLING CO., LTD. 速克立股份有限公司**

No. 991 Zhongshan Rd. Shengang Dist. Taichung 42955, Taiwan

TEL：+886-4-2561-4924 FAX：+886-42561-6479

E-mail：pc.motor@msa.hinet.net Website：www.powercircling.com